Week 7

1. Let D be a loopless digraph, F a spanning forest of D, and $\mathbf{C}_F$ the basis matrices of the cycle space $\mathcal{C}(D)$ corresponding of F. Show that $\mathbf{C}_F$ is unimodular.

Proof. We follow the approach outlined in the PPT for the subsequent proof.

A Supplementary Proof of Proposition 2.2.8(See *GT-C2-2026-en.pdf*, Page 52):

$$\begin{array}{ccc} & C & \\ & \begin{array}{cc} F & \overline{F} \end{array} & \\ \left(\begin{array}{cc} C_1 & C_2 \end{array} \right) & & \end{array} \qquad \begin{array}{ccc} & C_F & \\ & \begin{array}{cc} F & \overline{F} \end{array} & \\ \left(\begin{array}{cc} C_3 & I \end{array} \right) & & \end{array}$$

Consider the form of C and C_F given above. Since both C and C_F are basis matrices of $\mathcal{C}(D)$, C can be obtained from C_F by elementary row operations. Thus, we obtain precisely

$$\begin{aligned} C = \begin{pmatrix} C_1 & C_2 \end{pmatrix} &= C_2 \begin{pmatrix} C_3 & I \end{pmatrix} \\ &= \left(C \mid \overline{F}\right) C_F. \end{aligned} \tag{1}$$

□

Let P be any full-order square submatrix of C_F. Let R be the edge subset of D corresponding to P; then $P = C_F|R$. If R contains a bond, then $\det P = 0$ (Theorem 2.2.5, see *GT-C2-2026-en.pdf*, Page 38). Otherwise, there exists a spanning forest F_1 such that $R \subseteq E(\overline{F_1})$. Since $|R| = m - n + \omega$, $R = E(\overline{F_1})$.

By Equation (1), $C_F = (C_F|\overline{F_1})C_{F_1}$. Restricting it to $\overline{F}$, we obtain

$$C_F|\overline{F} = (C_F|\overline{F_1})(C_{F_1}|\overline{F}).$$

Hence,

$$\det(C_F|\overline{F_1}) \det(C_{F_1}|\overline{F}) = 1.$$

Since both determinants are determinants of integer matrices, their values are integers. It follows that

$$\det P = \det C_F|R = \det(C_F|\overline{F_1}) = \pm 1.$$

Thus, C_F is unimodular. □

2. Let D be a nontrivial connected loopless digraph and a any edge of D. Prove

$$\tau(D) = \tau(D \cdot a) + \tau(D - a).$$

Here $D \cdot a$ is the digraph obtained from D by contracting a: delete a, identify its endpoints u and v as a single vertex, and retain all other edges, with their directions preserved.

Proof. Every spanning tree of D not containing a is also a spanning tree of $D - a$, and conversely. Thus $\tau(D - a)$ counts the spanning trees of D that do not contain a. For every spanning tree T of D containing a, contracting a gives a spanning tree $T \cdot a$ of $D \cdot a$. This correspondence is clearly a bijection. Hence $\tau(D \cdot a)$ counts the spanning trees of D that contain a. Therefore

$$\tau(D) = \tau(D - a) + \tau(D \cdot a).$$

□

3. The Kruskal algorithm for a minimum tree in a connected weighted simple graph (G, w) is as follows:

1. Choose $e_1 \in E(G)$ with $w(e_1)$ as small as possible.

2. Once $e_1, \ldots, e_i$ are chosen, choose $e_{i+1} \notin \{e_1, \ldots, e_i\}$ so that $G[\{e_1, \ldots, e_{i+1}\}]$ is acyclic and $w(e_{i+1})$ is as small as possible.

3. Stop when $n - 1$ edges have been chosen; otherwise return to Step 2.

(a) Prove that Kruskal's algorithm constructs a minimum tree of G.

(b) Use Kruskal's algorithm to find a minimum tree in each of the following weighted graphs.

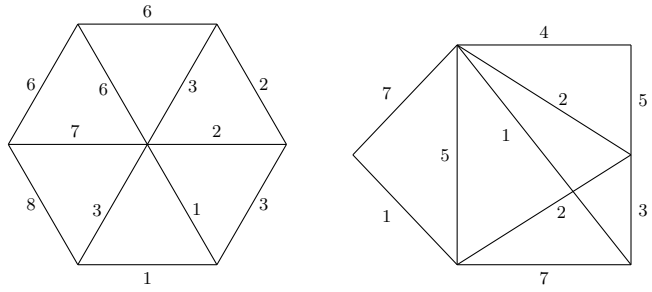

Proof. **(a)** By contradiction. Let T be the tree chosen by Kruskal algorithm with

$$E(T) = \{e_1, e_2, \ldots, e_{n-1}\}.$$

For any spanning tree T' of G other than T, denote by $f(T')$ the smallest index i such that e_i is not in T'. Now assume T is not an optimal tree, and let T' be an optimal tree such that $f(T')$ is as large as possible, then $f(T') \leq n - 1$. Suppose $f(T') = k$. Let

$$E(T') = \{e_1, e_2, \ldots, e_{k-1}, e'_k, e'_{k+1}, \ldots, e'_{n-1}.\}$$

$T' + e_k$ contains a unique cycle C. Let e be an edge of C that is in T' but not in T. Obviously, e is not a cut edge of $T' + e_k$. Hence, $T' + e_k - e$ is a connected graph with $n - 1$ edges, so is a tree. By the choice of T,

$$\omega(e) \geq \omega(e_k).$$

Thus, $\omega(T' + e_k - e) \leq \omega(T')$, so $T' + e_k - e$ is an optimal tree as well. However, $f(T' + e_k - e) > k$, contradicting the maximality of k.

(b) First graph: As shown in the below figure.

$$od \to de \to oc \to bc \to ab \to af.$$

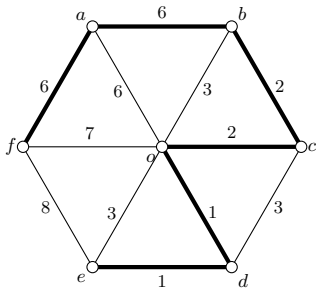

Second graph: As shown in the below figure.

$$ac \to bf \to be \to ce \to bd.$$

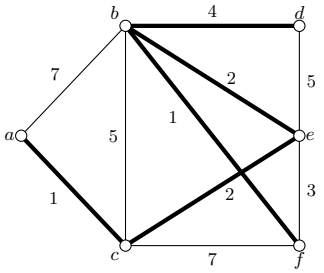

□

4. A company has branches in six cities $x_1, x_2, \ldots, x_6$. The direct airfare from x_i to x_j is the (i,j)-entry of the matrix below, where ∞ means no direct flight. Construct a table of cheapest routes between every pair of cities.

$$\begin{pmatrix} 0 & 50 & \infty & 40 & 25 & 10 \\ 50 & 0 & 15 & 20 & \infty & 25 \\ \infty & 15 & 0 & 10 & 20 & \infty \\ 40 & 20 & 10 & 0 & 10 & 25 \\ 25 & \infty & 20 & 10 & 0 & 55 \\ 10 & 25 & \infty & 25 & 55 & 0 \end{pmatrix}.$$

Proof. Run Moore-Dijkstra's algorithm once from each vertex x_i for $1 \le i \le 6$. For each i, we obtain a shortest-path spanning out-tree T_i rooted at x_i.

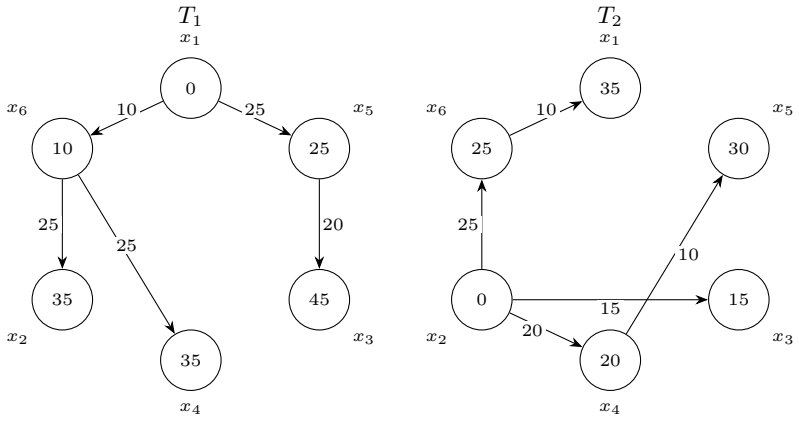

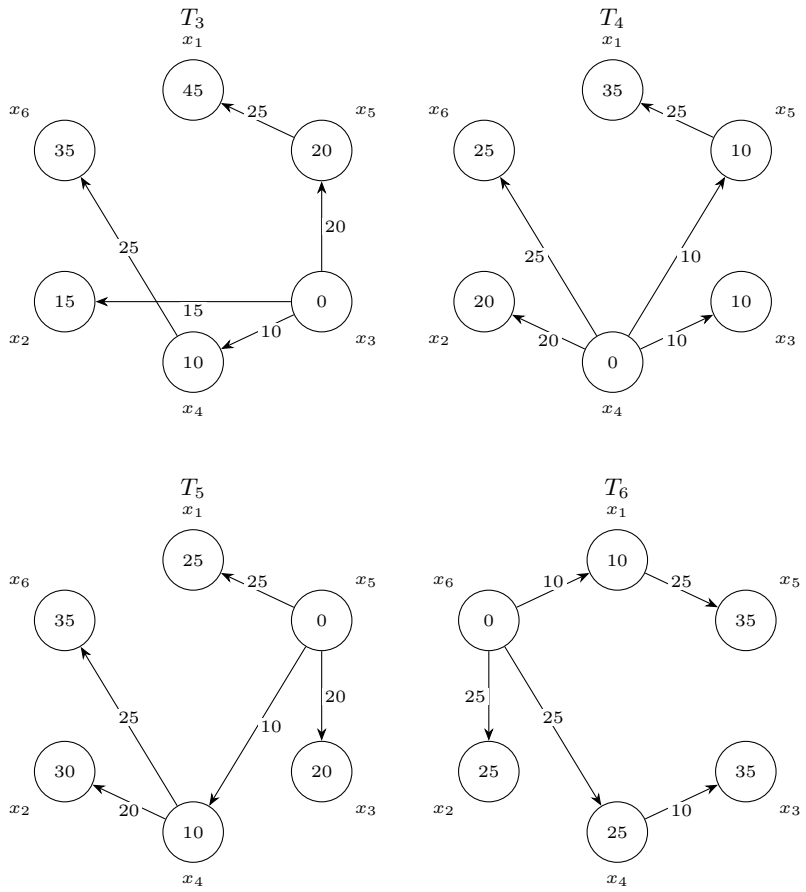

From these six shortest-path trees we obtain the **distance matrix**

$$D = (d(x_i, x_j)) = \begin{pmatrix} 0 & 35 & 45 & 35 & 25 & 10 \\ 35 & 0 & 15 & 20 & 30 & 25 \\ 45 & 15 & 0 & 10 & 20 & 35 \\ 35 & 20 & 10 & 0 & 10 & 25 \\ 25 & 30 & 20 & 10 & 0 & 35 \\ 10 & 25 & 35 & 25 & 35 & 0 \end{pmatrix}.$$

Finally, the cheapest routes between every pair of cities are listed below.

City pair	Cheapest route	Cost
x_1, x_2	$x_1 \to x_6 \to x_2$	35
x_1, x_3	$x_1 \to x_5 \to x_3$	45
x_1, x_4	$x_1 \to x_6 \to x_4$	35
x_1, x_5	$x_1 \to x_5$	25
x_1, x_6	$x_1 \to x_6$	10
x_2, x_3	$x_2 \to x_3$	15
x_2, x_4	$x_2 \to x_4$	20
x_2, x_5	$x_2 \to x_4 \to x_5$	30
x_2, x_6	$x_2 \to x_6$	25
x_3, x_4	$x_3 \to x_4$	10

City pair	Cheapest route	Cost
x_3, x_5	$x_3 \to x_5$	20
x_3, x_6	$x_3 \to x_4 \to x_6$	35
x_4, x_5	$x_4 \to x_5$	10
x_4, x_6	$x_4 \to x_6$	25
x_5, x_6	$x_5 \to x_4 \to x_6$	35

□

5. (Optional) A *matching* of a graph $G = (V, E)$ is an edge subset in which no two edges are adjacent; a matching with exactly $|V(G)|/2$ edges is a *perfect matching*. A graph is *cubic* if every vertex has degree 3.

Berge–Fulkerson conjecture (1971). Every bridgeless cubic graph admits six perfect matchings such that every edge is covered exactly twice.

Berge conjecture (1979). Every bridgeless cubic graph admits five perfect matchings such that every edge belongs to at least one of them.

(1) Prove both conjectures for cubic graphs that are 3-edge-colorable.

(2) Prove both conjectures for cubic Hamiltonian graphs. A Hamilton cycle of G is a cycle containing every vertex of G.

(3) Do these conjectures hold for cubic hypohamiltonian graphs? A graph G is hypohamiltonian if G is not Hamiltonian but $G - v$ is Hamiltonian for every $v \in V(G)$.

Proof. **(1)** Let M_1, M_2, M_3 be the three color classes of a proper 3-edge-coloring of G. Then each M_i is a perfect matching, and

$$E(G) = M_1 \sqcup M_2 \sqcup M_3.$$

Taking two copies of each M_i gives six perfect matchings in which every edge appears exactly twice. This proves the Berge–Fulkerson assertion. Moreover, any five of these six matchings still cover every edge, which proves the Berge assertion.

(2) Since the edges of a Hamiltonian cycle can be colored alternately with two colors, and the remaining edges form a perfect matching, G is 3-edge-colorable. Thus the result follows from (1).

(3) The Berge assertion does hold for cubic hypohamiltonian graphs, as shown by Wuyang Sun in 2017. By contrast, the Berge–Fulkerson assertion for all cubic hypohamiltonian graphs remains open. □